Husqvarna®

SPARE PARTS LIST

ROBOTIC LAWN MOWERS

220 AC, 2013-06

G AUTOMOWER 220 AC ACCESSORIES

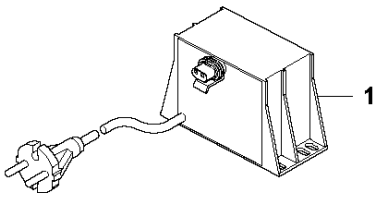
1

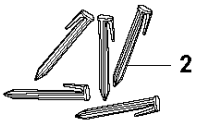
2

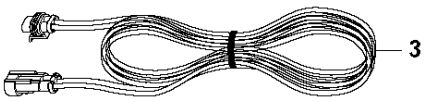
3

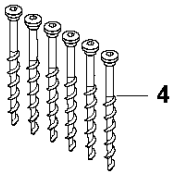
4

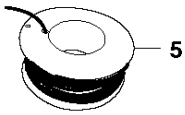
5

6

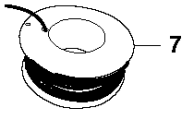
7

8

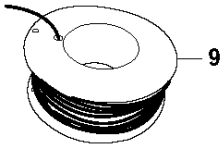
9

10

11

12

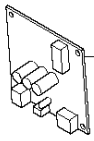
13

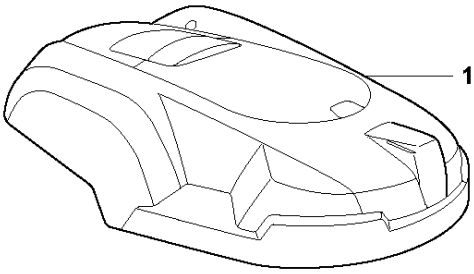
14

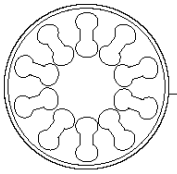
15

16

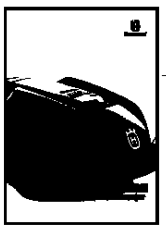
17

Ref	Part No	Description	Remark	QTY KIT
1	535 12 37-01	TRANSFORMER	(EU)	1
1	535 12 37-02	TRANSFORMER	(UK/IRL)	1
1	535 12 37-03	TRANSFORMER	(CH)	1
1	535 12 37-04	TRANSFORMER	(US/MX)	1
1	535 12 37-05	TRANSFORMER	(AU/NZ)	1
2	504 04 97-01	STAPLE	100pcs	1
2	577 86 42-01	STAPLE	Blister pack, 100pcs	1
3	535 12 73-05	CABLE	(20m)	1
4	575 23 86-01	SCREW KIT	6pcs	1
4	577 86 49-01	SCREW	Blister Pack, 3pcs	2
5	501 98 03-02	WIRE	(150m)	1
5	577 86 43-01	WIRE	Blister pack, (150m)	1
6	535 12 90-01	COUPLER		1
6	577 86 48-01	CONNECTOR	Blister Pack, 5pcs	1
7	501 98 03-01	WIRE	(250m)	1
8	501 98 02-01	COUPLER		1
8	577 86 47-01	COUPLER	Blister pack, 5pcs	2
9	522 91 41-01	WIRE	(500m, Ø3.4 mm)	1
10	501 98 02-02	COUPLER	50pcs	1
11	544 17 75-01	MEASURING TAPE		1
12	535 13 16-01	LABEL		1
13	578 78 86-01	PRINTED CIRCUIT ASSY	Thunder lightning protection	1
14	575 24 26-01	BODY	complete kit, Earth, dark brown metallic	1
14	575 24 26-02	BODY	complete kit, Air, white metallic	1
14	575 24 26-03	BODY	complete kit, Water, dark blue metallic	1
14	575 24 26-04	BODY	complete kit, Fire, orange metallic	1
15	581 84 28-01	STICKER	Cable markers	1
16	115 53 38-01	OPERATOR'S MANUAL	Swedish	1
16	115 53 38-06	OPERATOR'S MANUAL	Danish	1
16	115 53 38-11	OPERATOR'S MANUAL	Finnish	1
16	115 53 38-21	OPERATOR'S MANUAL	Norwegian	1
16	115 53 38-26	OPERATOR'S MANUAL	English	1
16	115 53 38-31	OPERATOR'S MANUAL	French	1
16	115 53 38-32	OPERATOR'S MANUAL	French (Canada)	1
16	115 53 38-36	OPERATOR'S MANUAL	Dutch	1
16	115 53 38-41	OPERATOR'S MANUAL	Italian	1
16	115 53 38-46	OPERATOR'S MANUAL	Spanish	1
16	115 53 38-51	OPERATOR'S MANUAL	German	1
16	115 53 38-56	OPERATOR'S MANUAL	Russian	1
16	115 53 38-58	OPERATOR'S MANUAL	Hungarian	1
16	115 53 38-59	OPERATOR'S MANUAL	Portuguese	1
16	115 53 38-61	OPERATOR'S MANUAL	Polish	1
16	115 53 38-62	OPERATOR'S MANUAL	Romanian	1
16	115 53 38-63	OPERATOR'S MANUAL	Estonian	1
16	115 53 38-64	OPERATOR'S MANUAL	Lettish	1
16	115 53 38-65	OPERATOR'S MANUAL	Lithuanian	1
16	115 53 38-68	OPERATOR'S MANUAL	Slovak	1
16	115 53 38-71	OPERATOR'S MANUAL	Greek	1
16	115 53 38-76	OPERATOR'S MANUAL	Turkish	1
16	115 53 38-81	OPERATOR'S MANUAL	Croatian	1
16	115 53 38-84	OPERATOR'S MANUAL	Slovenian	1
16	115 53 38-90	OPERATOR'S MANUAL	Czech	1
16	115 53 38-95	OPERATOR'S MANUAL	English (EPA, CARB)	1
16	115 53 38-96	OPERATOR'S MANUAL	Spanish (USA)	1
17	115 13 05-01	INSTRUCTION	Swedish	1
17	115 13 05-06	INSTRUCTION	Danish	1
17	115 13 05-11	INSTRUCTION	Finnish	1
17	115 13 05-21	INSTRUCTION	Norwegian	1
17	115 13 05-26	INSTRUCTION	English	1
17	115 13 05-31	INSTRUCTION	French	1

Ref	Part No	Description	Remark	QTY KIT
17	115 13 05-36	INSTRUCTION	Dutch	1
17	115 13 05-41	INSTRUCTION	Italian	1
17	115 13 05-46	INSTRUCTION	Spanish	1
17	115 13 05-51	INSTRUCTION	German	1
17	115 13 05-56	INSTRUCTION	Russian	1
17	115 13 05-58	INSTRUCTION	Hungarian	1
17	115 13 05-59	INSTRUCTION	Portuguese	1
17	115 13 05-61	INSTRUCTION	Polish	1
17	115 13 05-62	INSTRUCTION	Romanian	1
17	115 13 05-63	INSTRUCTION	Estonian	1
17	115 13 05-64	INSTRUCTION	Lettish	1
17	115 13 05-65	INSTRUCTION	Lithuanian	1
17	115 13 05-68	INSTRUCTION	Slovak	1
17	115 13 05-71	INSTRUCTION	Greek	1
17	115 13 05-76	INSTRUCTION	Turkish	1
17	115 13 05-81	INSTRUCTION	Croatian	1
17	115 13 05-84	INSTRUCTION	Slovenian	1
17	115 13 05-90	INSTRUCTION	Czech	1
17	115 13 05-95	INSTRUCTION	English (EPA, CARB)	1

H AUTOMOWER 220 AC ACCESSORIES

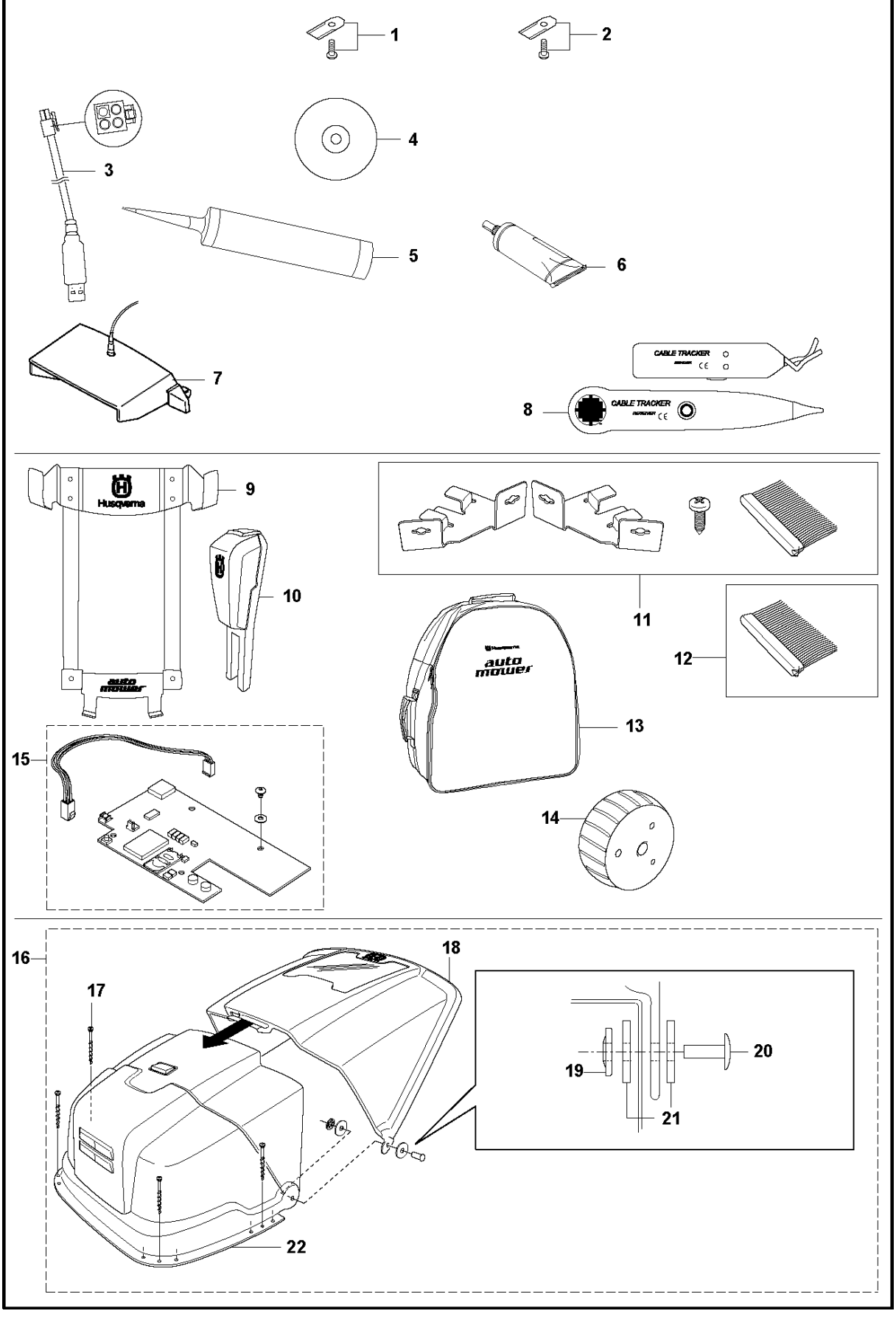

Ref	Part No	Description	Remark	QTY	KIT
1	535 13 87-02	BLADE(9PCS)	Carbon steel, 9pcs	1	
1	577 86 44-01	BLADE	Carbon steel, Blister Pack, 9pcs	1	
1	535 13 88-02	BLADE 30PCS	Carbon steel, 30pcs	1	
1	505 12 78-02	BLADE	Carbon steel, 500pcs	1	
2	577 60 64-02	BLADE	Carbon steel, Thick, 9pcs	1	
2	577 86 46-01	BLADE	Carbon steel, Thick, Blister Pack, 9pcs	1	
2	577 60 65-02	BLADE	Carbon steel, Thick, 30pcs	1	
2	577 60 66-02	BLADE	Carbon steel, Thick, 300pcs	1	
3	535 13 23-02	WIRING		1	
4	577 85 81-02	DVD	(USB)	1	
5	578 05 13-02	GREASE TUBE		1	
5	579 38 19-02	GREASE	Yellow (300 ml)	1	
6	578 05 13-01	GREASE TUBE	Transparent (300 ml)	1	
6	579 38 19-01	GREASE	Yellow (85 ml)	1	
7	522 73 65-01	ADAPTER	Transparent (85 ml)	1	
8	577 60 68-01	TEST EQUIPMENT	code transfer unit	1	
9	504 82 13-01	WALL HANGER		1	
10	522 42 58-01	BOOSTER		1	
11	505 13 27-01	BRUSH KIT	Incl Brush, 6pcs	1	
11	577 86 50-01	BRUSH KIT	Incl Brush, Blister Pack, 6pcs	1	
12	505 13 28-02	BRUSH	6pcs	1	
13	522 91 67-01	BAG		1	
14	575 23 17-02	WHEEL KIT	(400g)	1	
14	577 86 51-01	WHEEL KIT	(400g), Blister pack, 2pcs	1	
15	575 24 24-02	GPS MODULE	compl GPS module	1	
16	504 82 14-01	HOUSING	compl	1	
17	575 23 86-01	SCREW KIT	6pcs	1	16
18	505 25 07-01	KIT		2	16
19	505 18 81-01	LOCK WASHER		2	16
20	505 12 36-01	PIN		4	16
21	505 22 94-01	WASHER		1	16
22	505 12 32-01	HOUSING		1	16

D AUTOMOWER 220 AC
BLADE MOTOR
& CUTTING EQUIPMENT

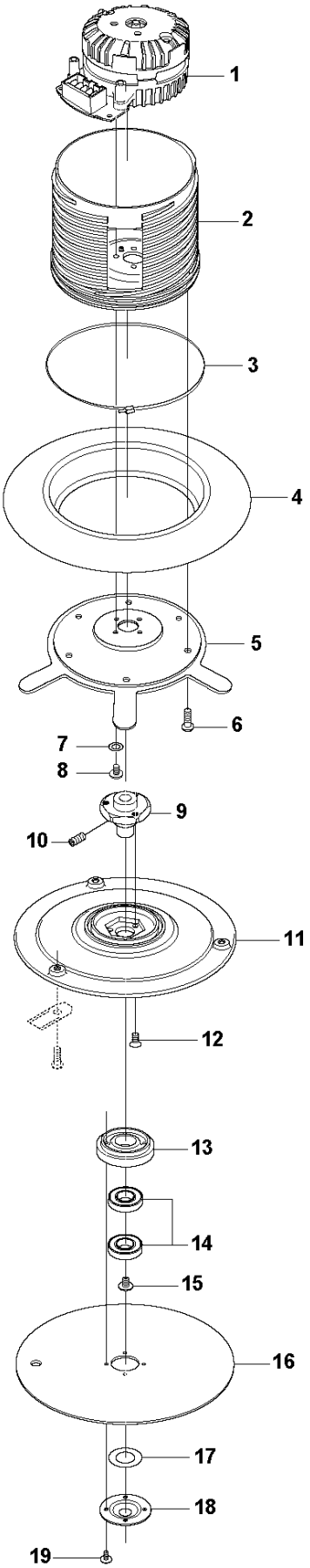

Ref	Part No	Description	Remark	QTY KIT
1	535 12 36-01	CUTTING ENGINE		1
2	510 14 41-01	MOTOR BOWL		1
3	525 25 14-01	TIE WRAP		1
4	535 12 23-01	RUBBER GAITERS		1
5	522 77 15-02	PLATE		1
6	575 54 33-14	SCREW		6
7	734 11 37-41	WASHER		4
8	502 23 91-01	SCREW		4
9	535 07 55-01	HUB		1
10	728 82 85-01	SCREW IHSETM		1
11	535 12 63-01	KNIFE DISK		1
12	535 13 05-01	SCREW		3
13	535 12 64-01	BEARING BOX		1
14	535 07 57-02	BALL BEARING		1
15	535 07 60-01	SCREW		1
16	535 07 59-01	SKID PLATE		1
17	535 08 25-01	GASKET		1
18	535 08 15-01	COVER WASHER		1
19	575 54 33-10	SCREW		4

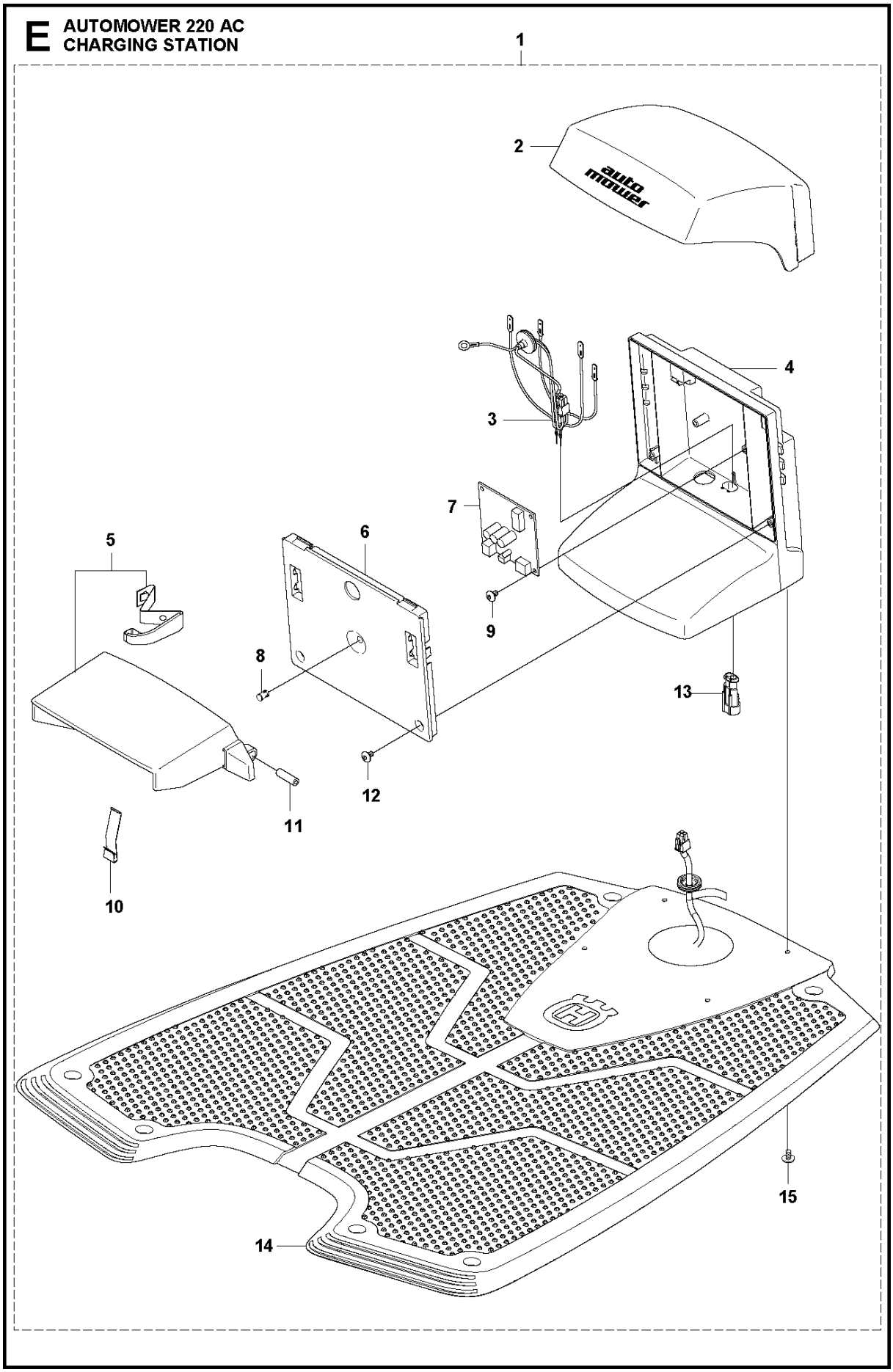
E
AUTOMOWER 220 AC
CHARGING STATION
1
2
auto mower
3
4
5
6
7
8
9
10
11
12
13
14
15

Ref	Part No	Description	Remark	QTY KIT
1	574 90 20-01	CHARGING STATION		1
1	574 90 20-04	CHARGING STATION	(CH)	1
2	535 12 47-02	COVER		1
3	544 98 38-06	WIRING ASSY		1
3	544 98 38-10	WIRING ASSY	(CH)	1
4	574 82 75-01	BODY		1
5	510 05 97-02	KIT		1
6	535 12 44-01	HUB CAP		1
7	578 78 84-01	PRINTED CIRCUIT ASSY		1
7	578 78 86-01	PRINTED CIRCUIT ASSY	(CH)	1
8	535 12 87-02	DIODE LENS		1
9	575 54 33-10	SCREW		2
10	535 12 86-01	SPRING PLATE		2
11	535 12 50-01	PIN		2
12	575 54 33-14	SCREW		2
13	535 12 85-01	CONTACT HOUSING		1
14	575 23 16-01	CHARGING PLATE		1
15	575 54 33-14	SCREW		4

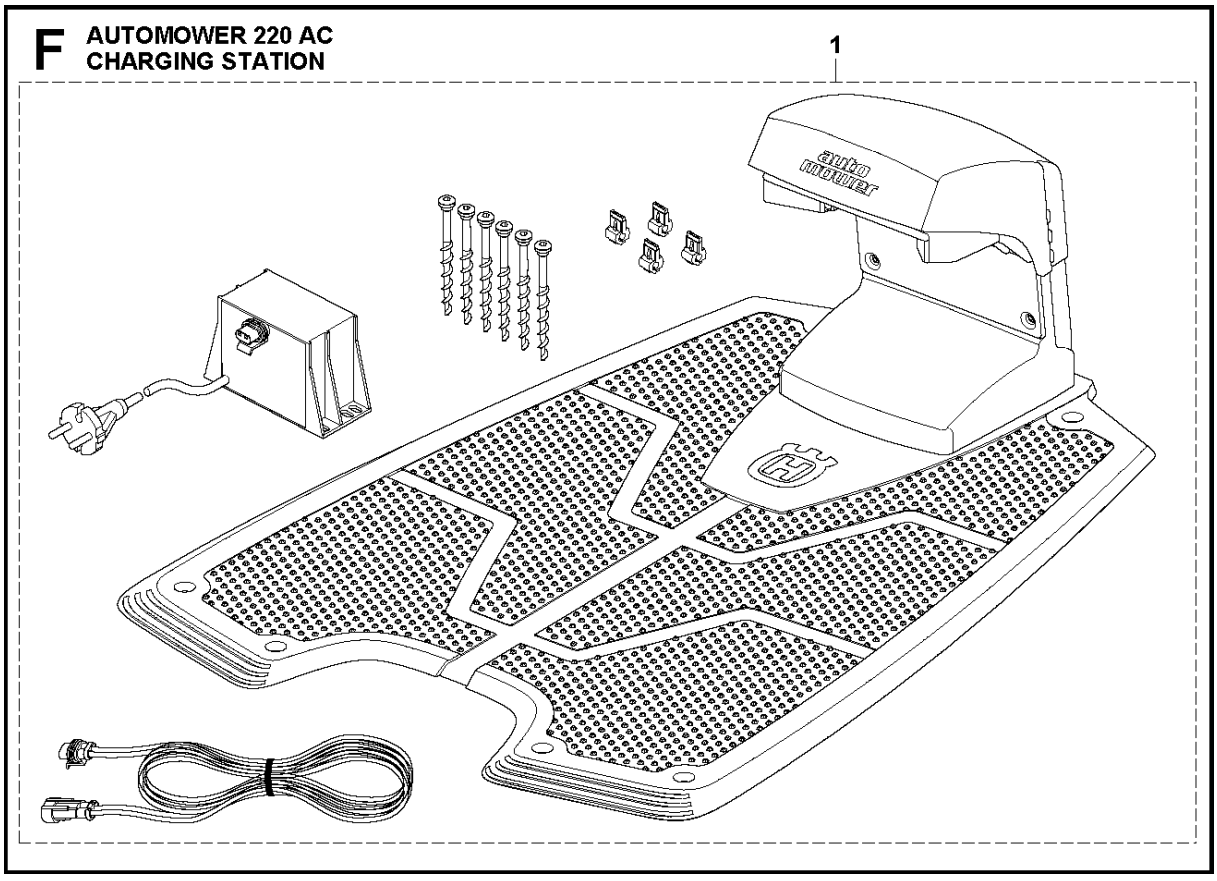
F
AUTOMOWER 220 AC
CHARGING STATION
1

Ref	Part No	Description	Remark	QTY KIT
1	575 24 13-01	CHARGING STATION	(EU)	1
1	575 24 13-02	CHARGING STATION	(UK/IRL)	1
1	575 24 13-03	CHARGING STATION	(CH)	1
1	575 24 13-04	CHARGING STATION	(US/CA/MX)	1
1	575 24 13-05	CHARGING STATION	(AU/NZ)	1

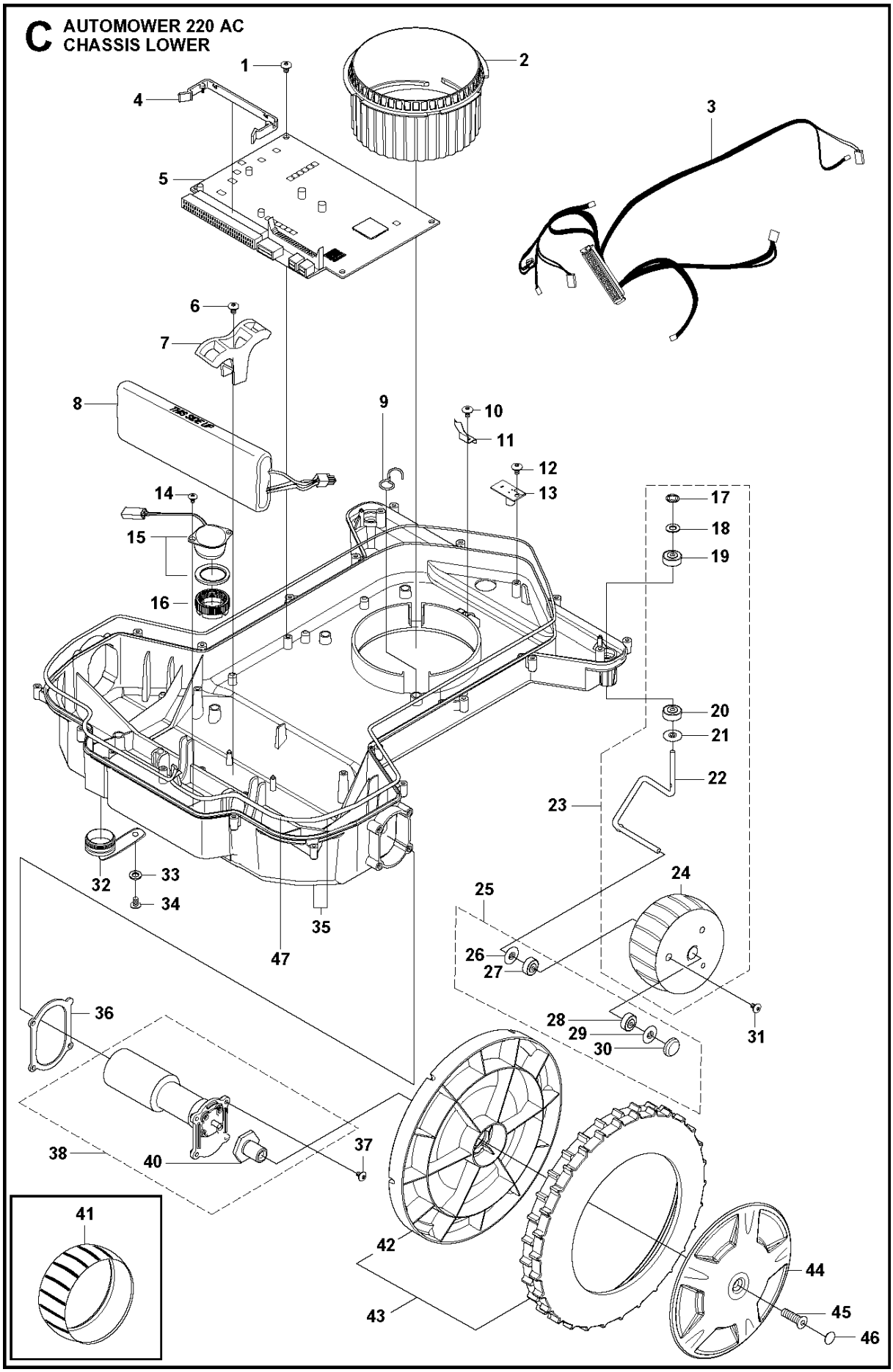
C AUTOMOWER 220 AC
CHASSIS LOWER
1
2
3
4
5
6
7
8
9
10
11
12
13
14
15
16
17
18
19
20
21
22
23
24
25
26
27
28
29
30
31
32
33
34
35
36
37
38
40
41
42
43
44
45
46
47

Ref	Part No	Description	Remark	QTY	KIT
1	575 54 33-10	SCREW		4	
2	535 12 21-02	NUT		1	
3	501 00 37-03	MAIN WIRING	Linix	1	
4	578 05 61-01	CLIP		1	
4	578 05 61-02	CLIP		50	
5	578 78 60-01	PRINTED CIRCUIT ASSY		1	
6	575 54 33-14	SCREW		2	
7	544 90 78-01	BRACKET		2	
8	535 12 09-01	BATTERY		1	
9	535 13 96-01	CABLE HOLDER		1	
10	535 13 03-14	SCREW ITXPANT		1	
11	535 12 24-01	LOCKING SPRING		1	
12	575 54 33-10	SCREW		2	
13	578 78 88-01	PRINTED CIRCUIT ASSY		2	
14	502 85 96-01	SCREW		2	
15	501 00 42-01	LOUD SPEAKER		1	
16	579 52 12-01	NUT		1	
17	735 58 41-09	WASHER		2	23
18	734 11 52-09	WASHER		2	23
19	522 50 50-01	BALL BEARING		2	23
20	522 50 50-01	BALL BEARING		2	23
21	535 08 78-02	WASHER		2	23
22	522 50 48-01	SPINDLE		2	23
23	522 66 45-02	KIT	compl	1	
24	575 23 17-01	WHEEL ASSY		2	23
25	523 34 37-01	BEARING KIT	compl	1	23
26	535 08 78-02	WASHER		2	23,25
27	522 50 50-01	BALL BEARING		2	23,25
28	522 50 50-01	BALL BEARING		2	23,25
29	535 08 78-02	WASHER		2	23,25
30	521 93 31-01	COVER WASHER		2	23,25
31	575 50 76-01	SCREW ITXPANT		6	
32	574 42 74-02	PLUG		1	
33	734 11 37-41	WASHER		1	
34	575 54 33-14	SCREW		1	
35	575 94 39-01	CHASSIS		1	
36	535 13 92-03	GASKET		2	
37	575 54 33-16	SCREW		8	
38	502 63 36-01	DRIVE MOTOR	compl, Linix	2	
40	544 90 68-02	HUB		1	38
41	574 44 98-01	WHEEL		2	
42	535 13 50-02	WHEEL		2	43
43	535 13 60-03	GEAR WHEEL	compl	2	
44	544 90 52-03	HUB CAP		2	
45	535 13 94-01	SCREW IHCSFM		2	
46	504 20 08-01	COVER WASHER		2	
47	575 98 62-01	SEALING STRIP	10 pcs	1	
47	574 87 47-01	SEALING STRIP		1	

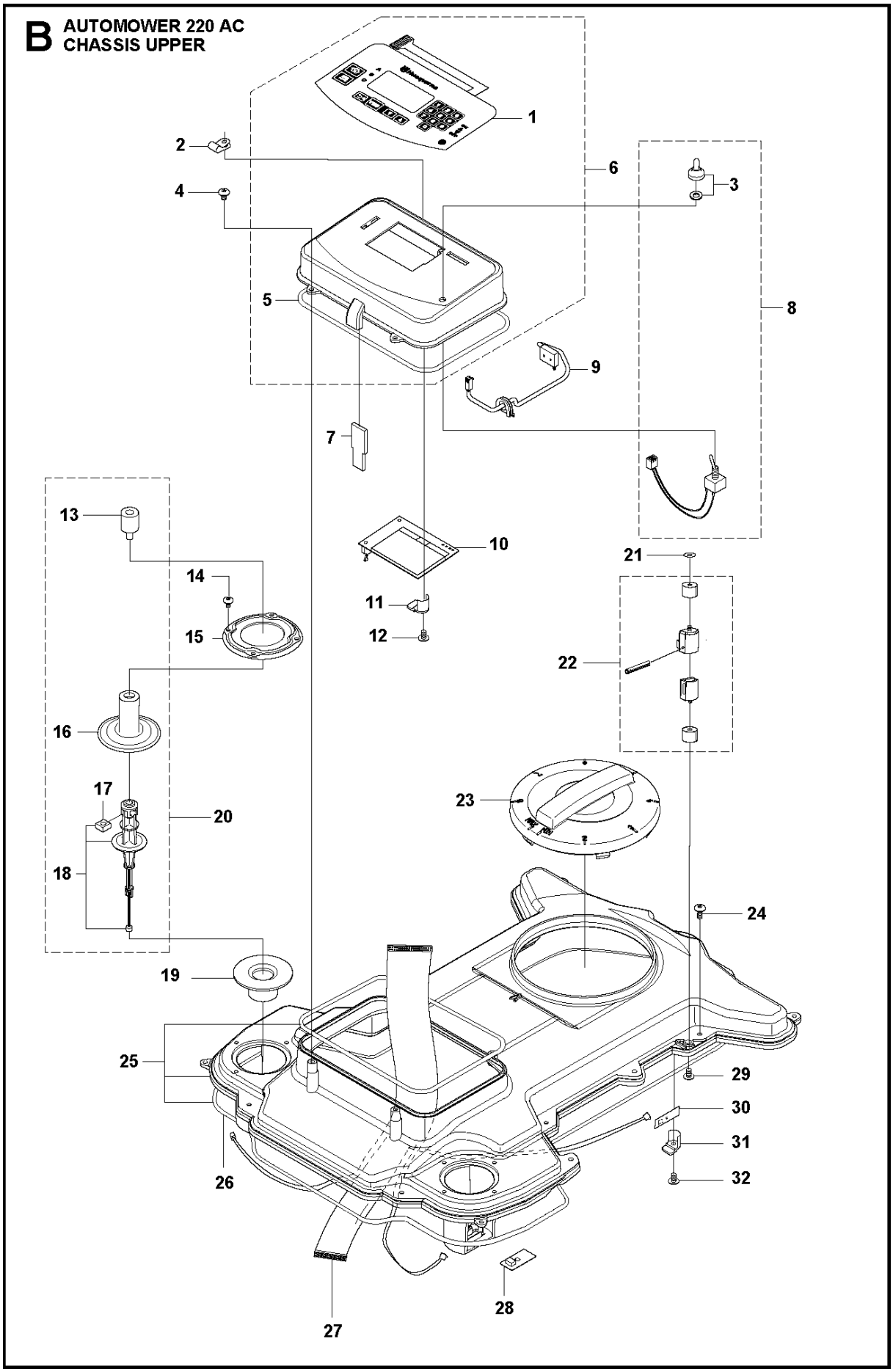
B AUTOMOWER 220 AC
CHASSIS UPPER
1
2
3
4
5
6
7
8
9
10
11
12
13
14
15
16
17
18
19
20
21
22
23
24
25
26
27
28
29
30
31
32

Ref	Part No	Description	Remark	QTY	KIT
1	544 90 01-01	KEYBOARD		1	6
2	577 52 72-01	CABLE CLAMP		1	
3	535 10 17-01	HUB CAP		1	6
4	574 45 01-01	SCREW ITXPANT		4	
5	575 98 63-01	SEALING STRIP	(10 pcs)	1	6
5	574 87 47-02	SEALING STRIP		1	
6	575 94 42-01	DISPLAY COVER	COMPL	1	
7	535 14 47-01	FILTER		1	
8	535 12 39-01	MAIN SWITCH	COMPL	1	
9	577 59 23-01	SWITCH KIT		1	
10	540 06 03-01	DISPLAY		1	
11	535 12 79-01	BRACKET		1	
12	575 54 33-14	SCREW		1	
13	577 67 06-01	RUBBER DAMPER		2	20
14	575 54 33-14	SCREW		8	
15	505 17 43-01	RING FASTENER		2	
16	577 52 58-01	RUBBER GAITERS		2	20
17	503 22 66-01	SQUARE NUT		2	20
18	579 24 88-01	COLUMN		2	20
19	535 14 32-01	DEFLECTION LIMITER		2	
20	577 59 84-03	COLUMN	COMPL	2	
21	510 74 70-00	LOCKWASHER		1	
22	544 14 15-01	SENSOR		1	
23	535 12 22-01	STEERING WHEEL		1	
24	574 45 01-01	SCREW ITXPANT		16	
25	575 94 38-01	CHASSIS		1	
26	575 98 62-01	SEALING STRIP	(10 pcs)	1	
26	574 87 47-01	SEALING STRIP		1	
27	544 12 69-01	WIRING		1	
28	578 78 90-01	PRINTED CIRCUIT ASSY		2	
29	535 07 60-02	SCREW		2	
30	578 78 90-01	PRINTED CIRCUIT ASSY		1	
31	535 12 79-01	BRACKET		1	
32	575 54 33-14	SCREW		1	

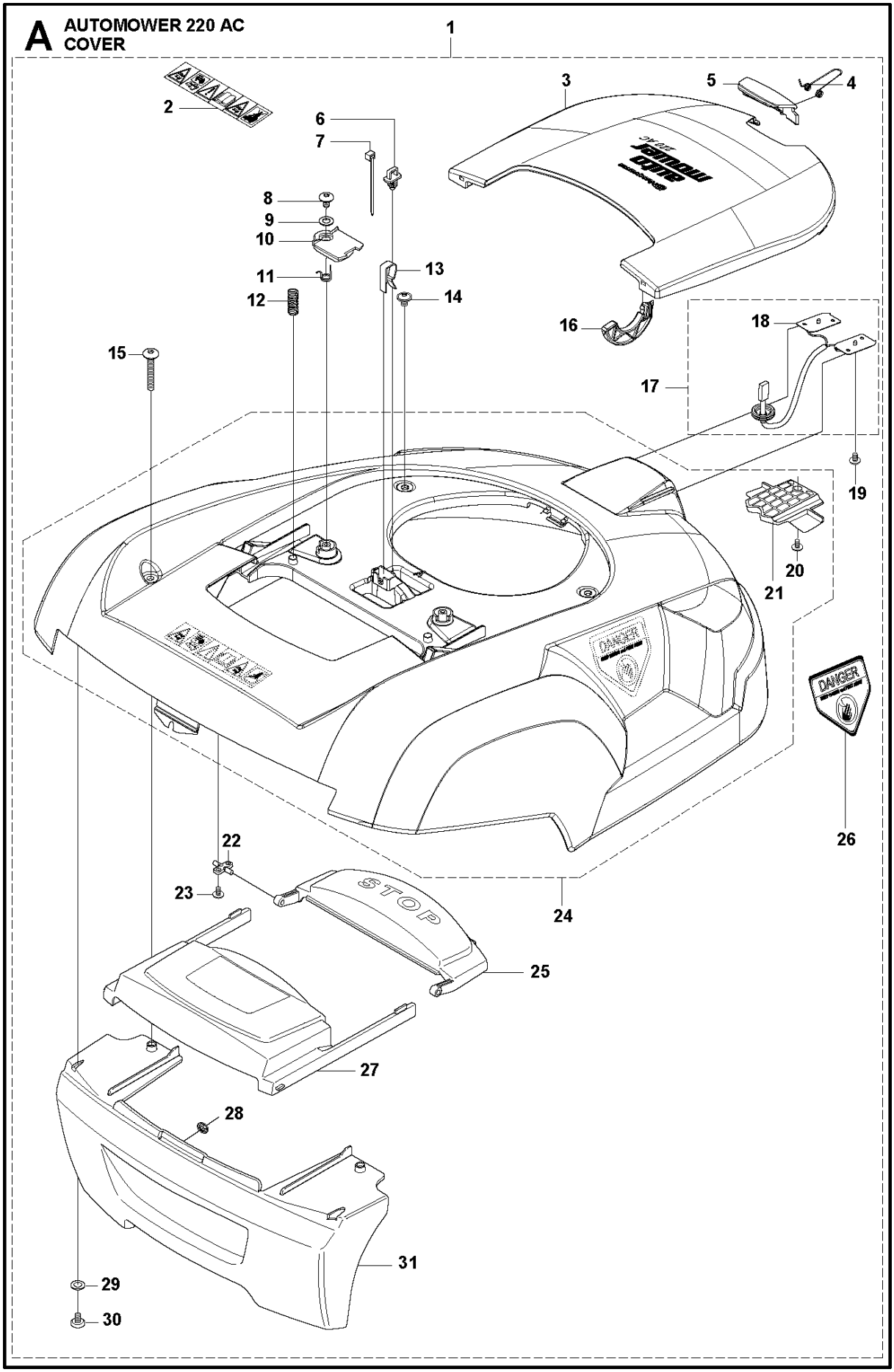
A
AUTOMOWER 220 AC
COVER
1
2
3
4
5
6
7
8
9
10
11
12
13
14
15
16
17
18
19
20
21
22
23
24
25
26
27
28
29
30
31
STOP
DANGER

Ref	Part No	Description	Remark	QTY	KIT
1	575 61 88-01	BODY KIT	COMPLETE KIT	1	
2	522 79 27-01	LABEL WARNING		1	
3	544 91 80-02	COVER		1	
4	535 13 57-01	TORSION SPRING		1	
5	535 13 49-02	LOCK		1	
6	535 13 04-01	ANCHOR		1	
7	900 23 87-08	TIE WRAP		1	
8	575 54 33-10	SCREW		2	
9	734 11 37-41	WASHER		2	
10	535 12 68-01	LOCK CLAMP		2	
11	535 13 02-01	TORSION SPRING		2	
12	535 13 01-01	SPRING		2	
13	535 08 98-01	CLIPS		1	
14	535 07 60-02	SCREW		2	
15	535 12 93-05	SCREW IHPANM		2	
16	535 13 53-01	PIVOT		2	
17	535 13 73-01	WIRING	COMPL	1	
18	535 13 59-01	CHARGING PLATE		2	17
19	575 54 33-06	SCREW		2	
20	575 54 33-12	SCREW		1	26
21	505 13 14-01	SPACER		1	26
22	535 12 78-01	SHAFT		2	
23	575 54 33-10	SCREW		4	
24	510 09 67-01	BODY	COMPL	1	
25	535 12 67-02	SWITCH		1	
26	513 99 61-00	DECAL	US/AU/NZ	1	
27	535 12 66-02	COVER		1	
28	735 58 52-09	WASHER		1	
29	734 11 37-41	WASHER		2	
30	575 54 33-14	SCREW		2	
31	574 43 09-01	BUMPER		1	